## TABLE OF CONTENTS


| PAGE | DESCRIPTION |
|---|---|
| 1 | Table of Contents |
| 2 | Technology Partners |
| 3 | Board Diagram / architecture |
| 4 | RA8 - Clock / USB / JTAG / MIPI |
| 5 | RA8 - GPIO1 |
| 6 | RA8 - GPIO2 |
| 7 | RA8 - Power pins |
| 8 | External memories - SDRAM, Octa, SDCard, EEprom |
| 9 | Debug Interface |
| 10 | Multiplexing |
| 11 | Graphics & HMI |
| 12 | Communications |
| 13 | Board Power Supply |
| 14 | Revision |


## PART NUMBERING

| MCU | BOARD PART NUMBER |
|---|---|
| RA8D1 | M13-RA8D1-EK |
| RA8M1 | M13-RA8M1-EK |

Renesas Electronics Corporation delivers trusted embedded design innovation with complete semiconductor solutions that enable billions of connected, intelligent devices to enhance the way people work and live. A global leader in microcontrollers, analog, power, and SoC products, Renesas provides comprehensive solutions for a broad range of automotive, industrial, infrastructure, and IoT applications that help shape a limitless future.

Wurth Elektronik eiSos is one of the leading manufacturers of electronic and electromechanical components in Europe. The product portfolio includes: EMC Components, EMC Filters, Capacitors, I nductors, RF Inductors and LTCC Components, Resistors, Quartz, Oscillators, Transformers, Components for Circuit Protection, Power Modules, LEDs, Connectors, Switches, High-Power Contacts, Assembly Technique, Wireless Connectivity and Sensors.

AP Memory is a memory IC design company focusing on Low to Mid density RAM solutions, providing a full range of IoT RAM (low pin count QSPIOPIPSRAM), ADMUX RAM (CellularRAM), low power DRAM (LPDDR2/LPDDR3), as well as innovative solution for AI such as UHS OPI and more... Partnering with an advanced DRAM technology foundry, AP Memory provides world class performance, supply longevity, quality and cost, including high volume and customer oriented innovative and customized solutions, in both KGD and package form.

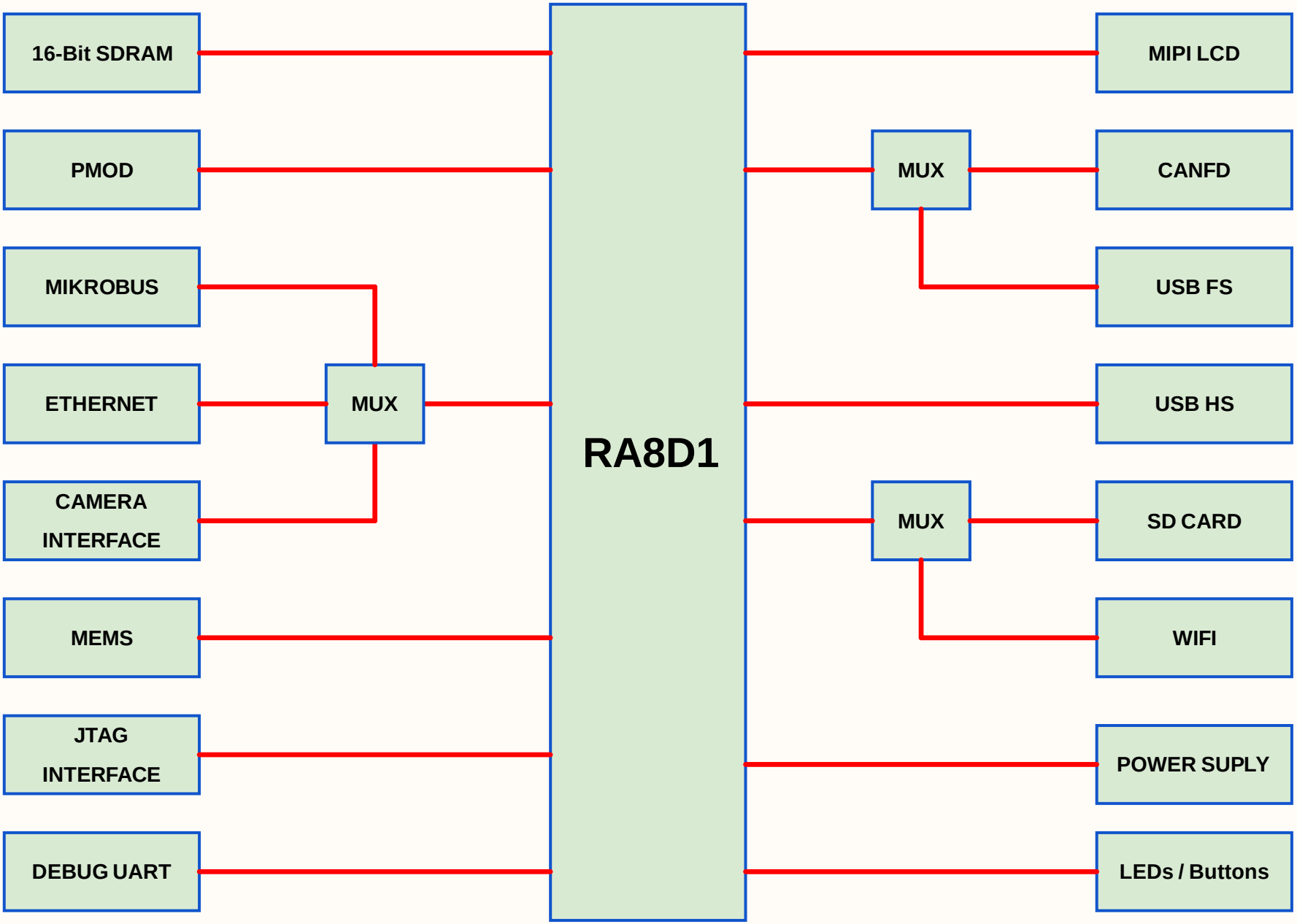


| | | | | | | | |
|---|---|---|---|---|---|---|---|
| | PRODUCT | M13-RA8x1-EK Evaluation Board | | DRAWN BY | Patrick SIONG | DRAWN DATE | 2023.12.05 |
| | PAGE | Board Diagram | | APPROVED BY | | APPD. DATE | |
| m3design | REFERENCE | VERSION | REV | REMARKS | UPDATED ON | SIZE | SHEET |
| | MTD0001.2301 | V1.0 | | | 2024.08.05 | A4 | 3 OF 14 |

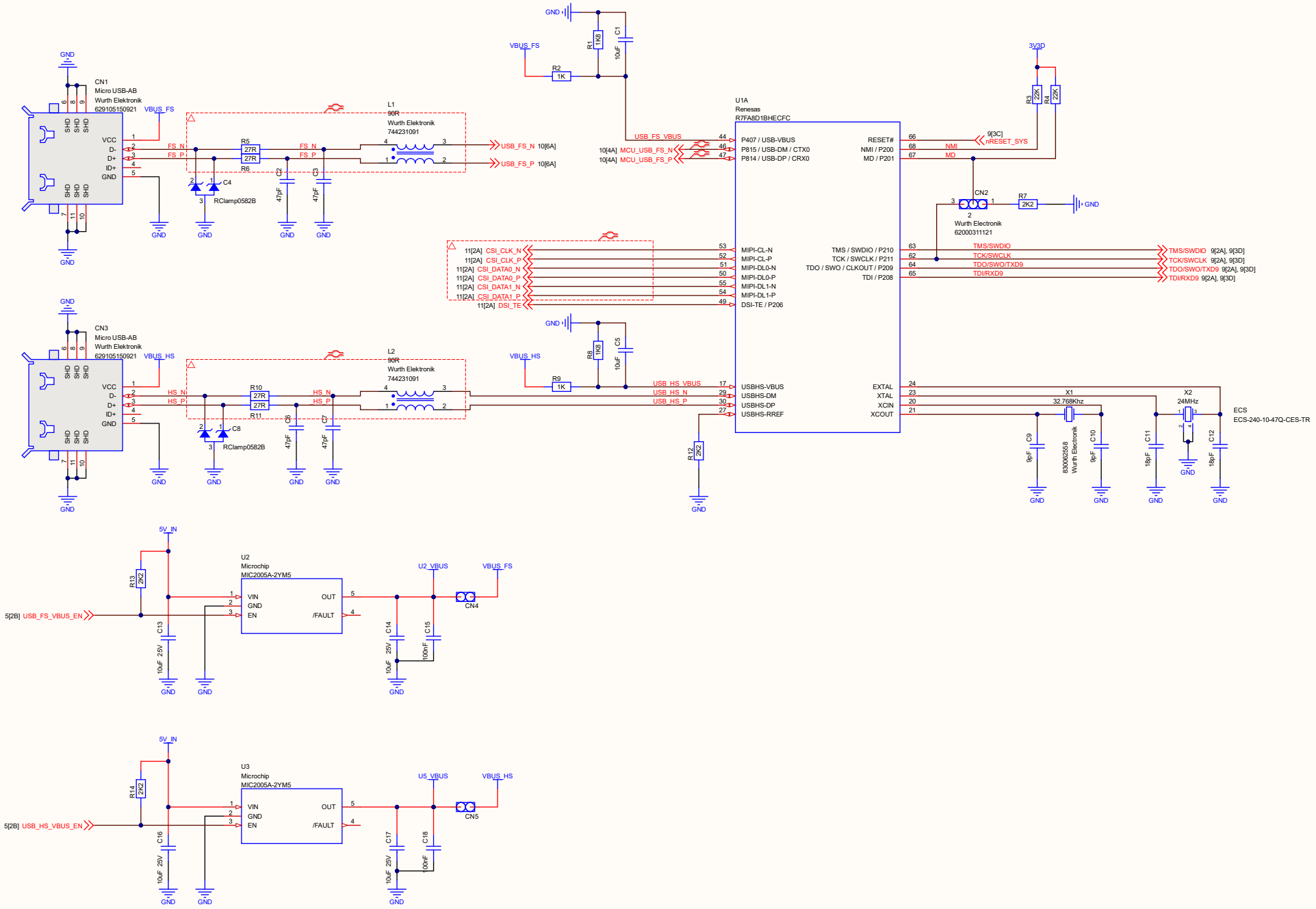


| | PRODUCT | M13-RA8x1-EK Evaluation Board | | DRAWN BY | Patrick SIONG | DRAWN DATE | 2023.12.05 |
|---|---|---|---|---|---|---|---|
| | PAGE | RA8 MCU - Clock/USB/JTAG | | APPROVED BY | | APPD. DATE | |
| m3design | REFERENCE | VERSION | REV | REMARKS | UPDATED ON | SIZE | SHEET |
| | MTD0001.2301 | V1.0 | | | 2024.08.05 | A4 | 4 OF 14 |

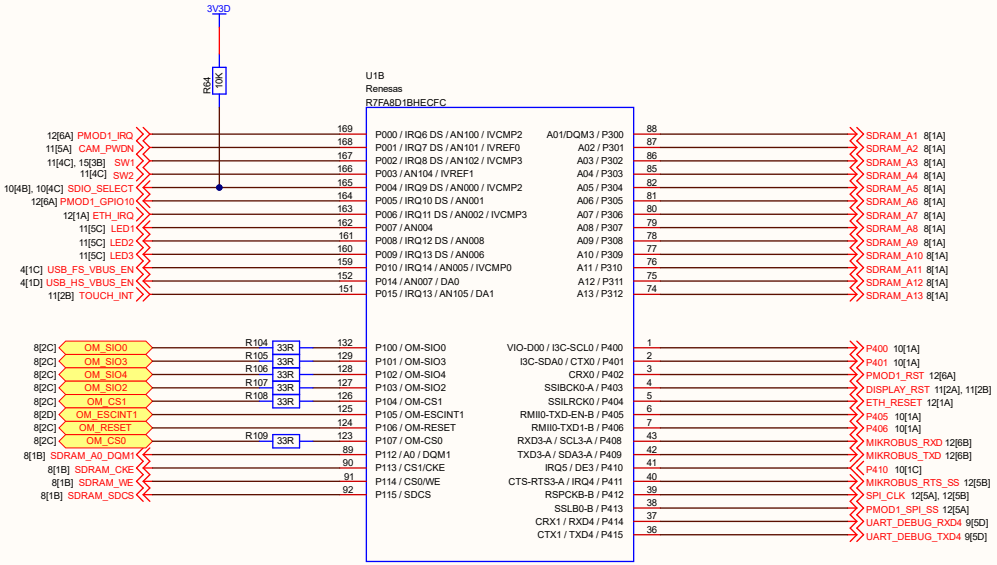


| | | | | | | | |
|---|---|---|---|---|---|---|---|
| | PRODUCT | M13-RA8x1-EK Evaluation Board | | DRAWN BY | Patrick SIONG | DRAWN DATE | 2023.12.05 |
| | PAGE | RA8 - GPIO connection P0 to P4 | | APPROVED BY | | APPD. DATE | |
| m3design | REFERENCE | VERSION | REV | REMARKS | UPDATED ON | SIZE | SHEET |
| | MTD0001.2301 | V1.0 | | | 2024.08.05 | A4 | 5 OF 14 |

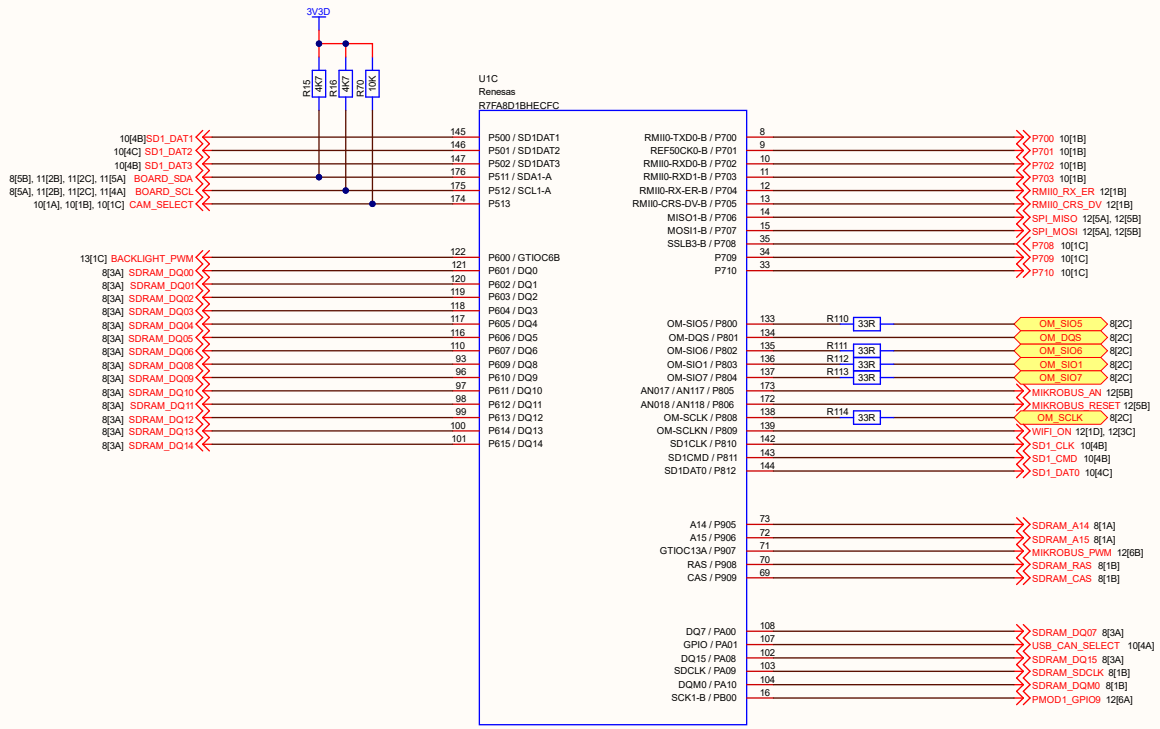


| | | | | | | | |
|---|---|---|---|---|---|---|---|
| | PRODUCT | M13-RA8x1-EK Evaluation Board | | DRAWN BY | Patrick SIONG | DRAWN DATE | 2023.12.05 |
| | PAGE | RA8 - GPIO connection P5 to PB | | APPROVED BY | | APPD. DATE | |
| m3design | REFERENCE | VERSION | REV | REMARKS | UPDATED ON | SIZE | SHEET |
| | MTD0001.2301 | V1.0 | | | 2024.08.05 | A4 | 6 OF 14 |

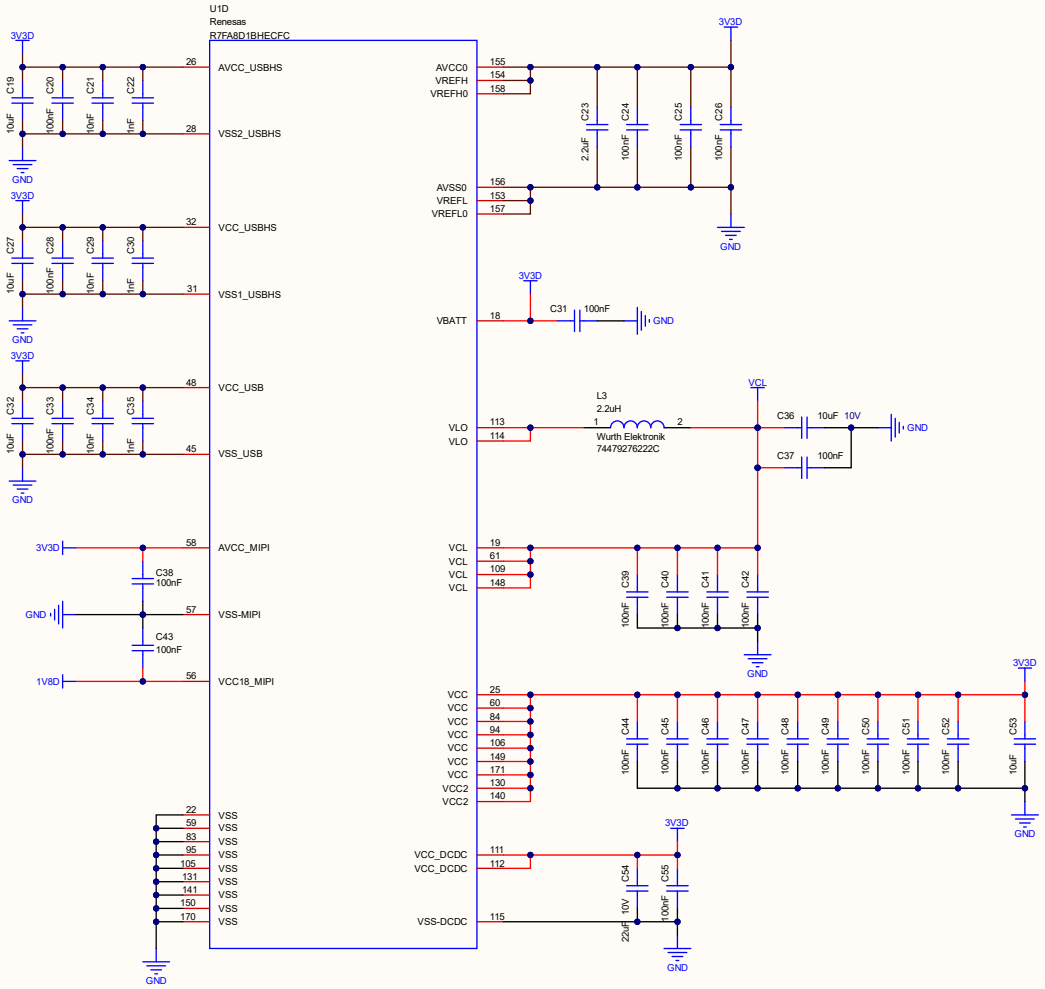


| | PRODUCT | M13-RA8x1-EK Evaluation Board | | DRAWN BY | Patrick SIONG | DRAWN DATE | 2023.12.05 |
|---|---|---|---|---|---|---|---|
| | PAGE | RA8 - Power pins | | APPROVED BY | | APPD. DATE | |
| m3design | REFERENCE | VERSION | REV | REMARKS | UPDATED ON | SIZE | SHEET |
| | MTD0001.2301 | V1.0 | | | 2024.08.05 | A4 | 7 OF 14 |

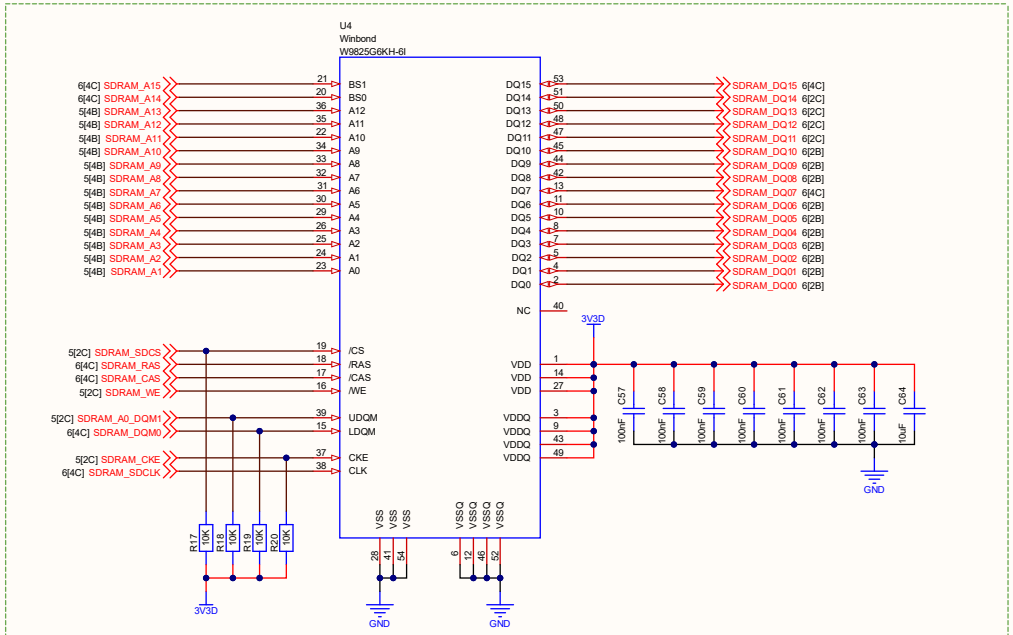


16-Bit SDRAM

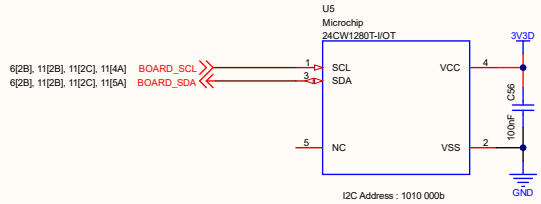


128Kb, I2C, EEPROM

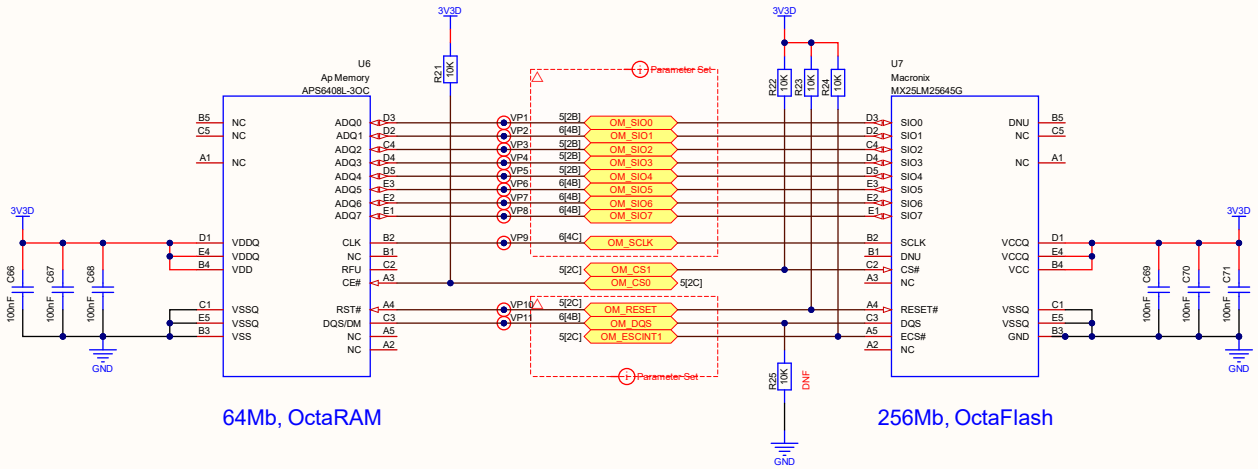


64Mb, OctaRAM

256Mb, OctaFlash

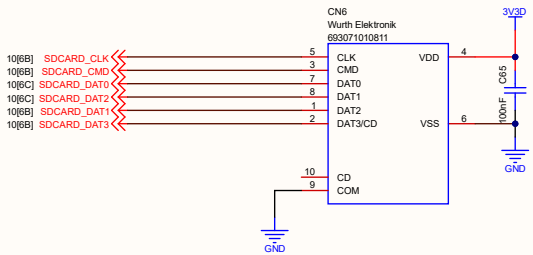


SDCARD Interface

| | | | | | | | |
|---|---|---|---|---|---|---|---|
| | PRODUCT | M13-RA8x1-EK Evaluation Board | | DRAWN BY | Patrick SIONG | DRAWN DATE | 2023.12.05 |
| | PAGE | External memories - SDRAM, Octa, SDCard, Eeprom | | APPROVED BY | | APPD. DATE | |
| m3design | REFERENCE | VERSION | REV | REMARKS | UPDATED ON | SIZE | SHEET |
| | MTD0001.2301 | V1.0 | | | 2024.08.05 | A4 | 8 OF 14 |

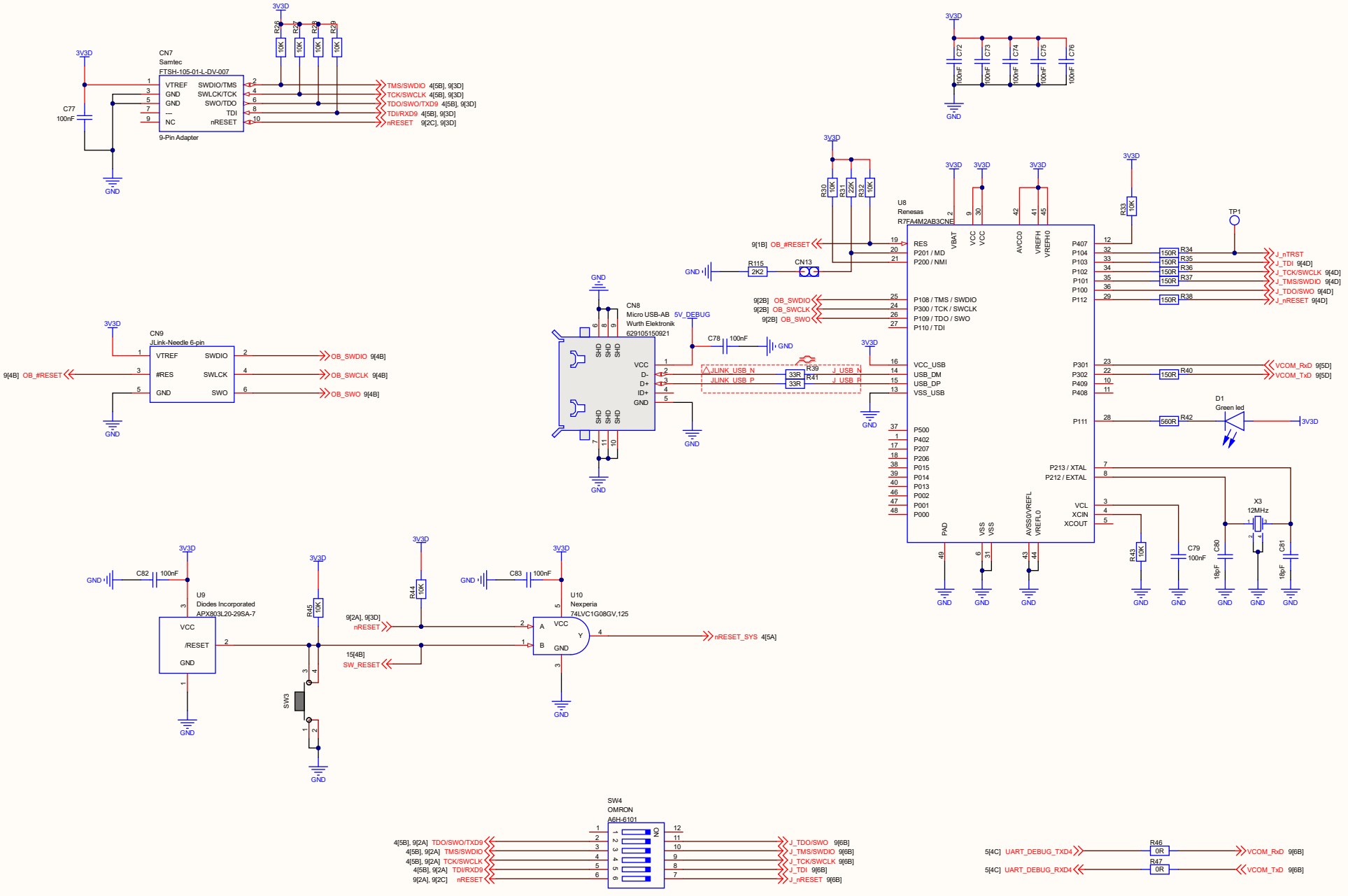


| | | | | | | | |
|---|---|---|---|---|---|---|---|
| | PRODUCT | M13-RA8x1-EK Evaluation Board | | DRAWN BY | Patrick SIONG | DRAWN DATE | 2024.08.05 |
| | PAGE | On Board Debug Interface | | APPROVED BY | | APPD. DATE | |
| m3design | REFERENCE | VERSION | REV | REMARKS | UPDATED ON | SIZE | SHEET |
| | MTD0001.2301 | V1.0 | | | 2024.08.05 | A4 | 9 OF 14 |

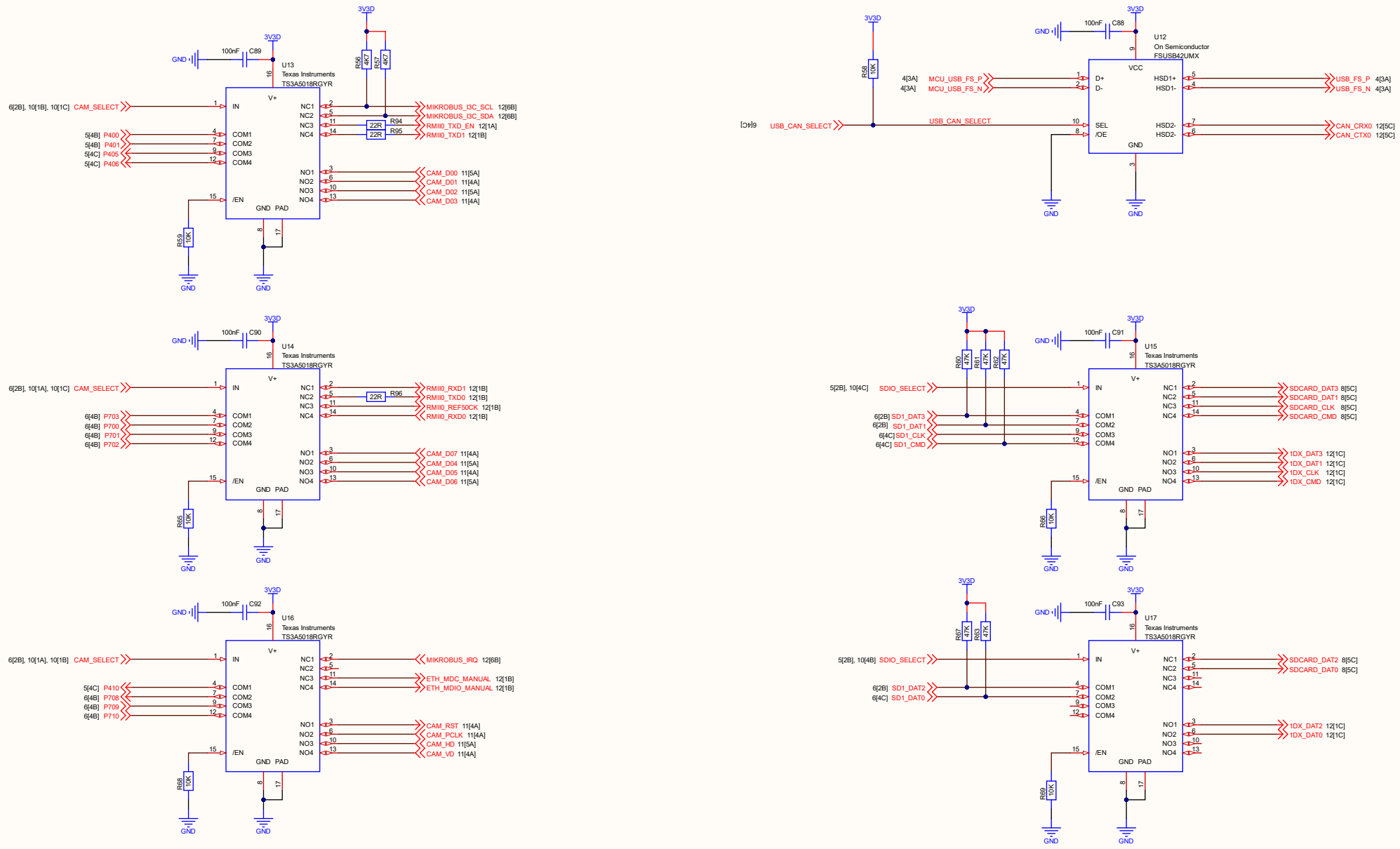


| CAM_SELECT | MUX |
|---|---|
| LOW | ETH / MIKROBUS |
| HIGH | CAMERA |

| | | | | | | | |
|---|---|---|---|---|---|---|---|
| | PRODUCT | M13-RA8x1-EK Evaluation Board | | DRAWN BY | Patrick SIONG | DRAWN DATE | 2023.12.05 |
| | PAGE | Multiplexing | | APPROVED BY | | APPD. DATE | |
| m3design | REFERENCE | VERSION | REV | REMARKS | UPDATED ON | SIZE | SHEET |
| | MTD0001.2301 | V1.0 | | | 2024.08.05 | A4 | 10 OF 14 |

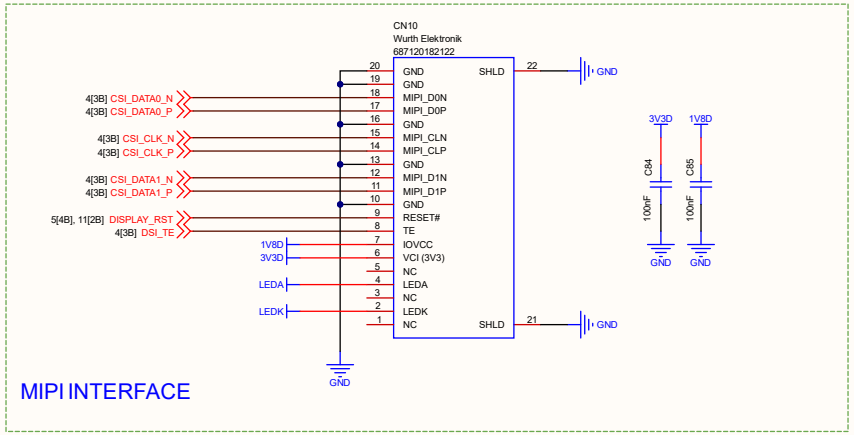


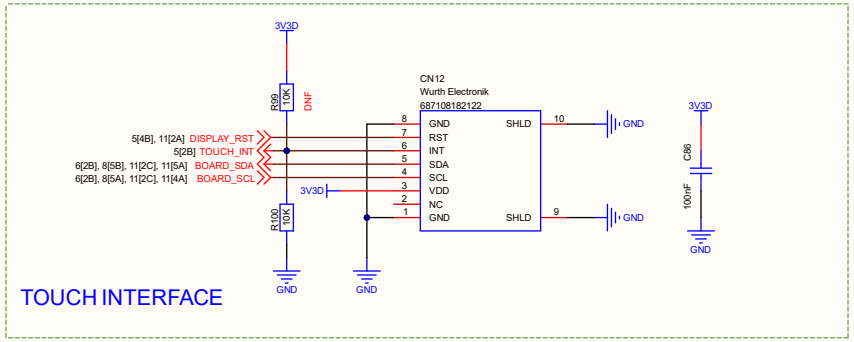


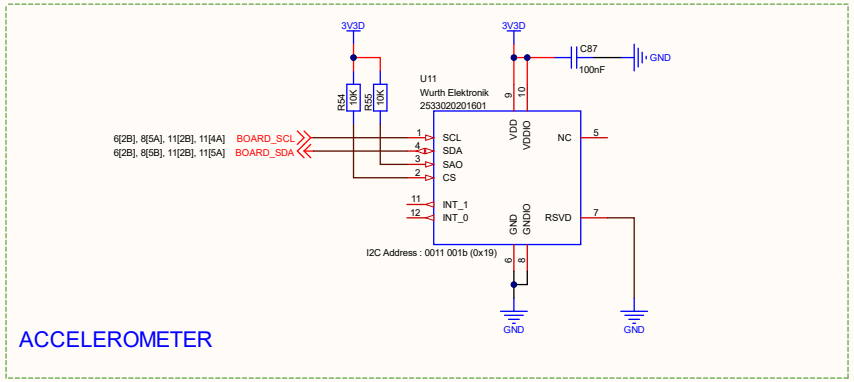


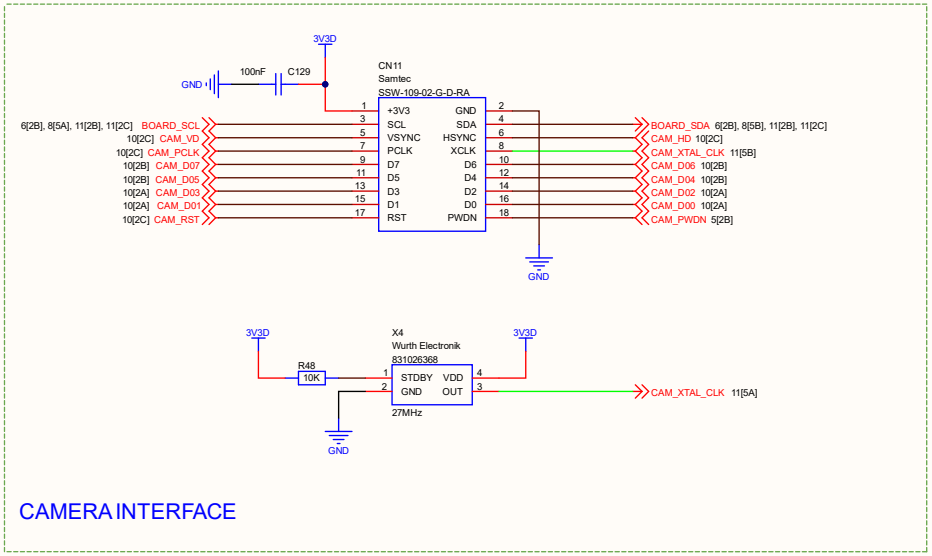


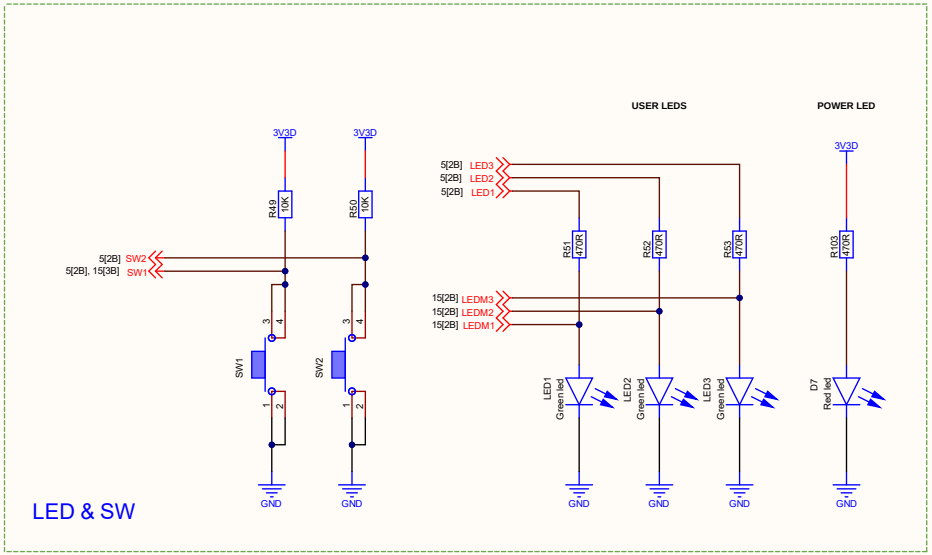


| | | | | | | | |
|---|---|---|---|---|---|---|---|
| | PRODUCT | M13-RA8x1-EK Evaluation Board | | DRAWN BY | Patrick SIONG | DRAWN DATE | 2024.08.05 |
| | PAGE | Graphics : HMI, Camera, MEM, LEDs & Switches | | APPROVED BY | | APPD. DATE | |
| m3design | REFERENCE | VERSION | REV | REMARKS | UPDATED ON | SIZE | SHEET |
| | MTD0001.2301 | V1.0 | | | 2024.08.05 | A4 | 11 OF 14 |

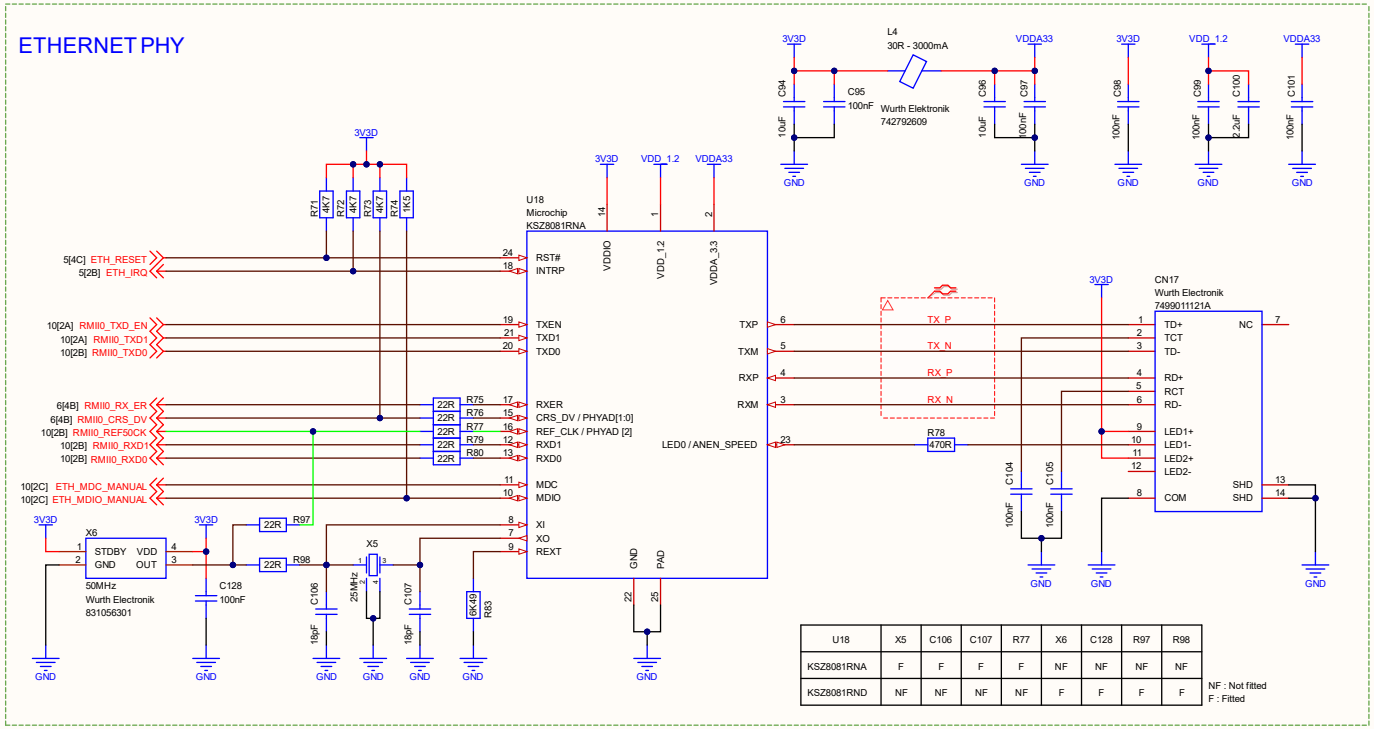


| U18 | X5 | C106 | C107 | R77 | X6 | C128 | R97 | R98 |
|---|---|---|---|---|---|---|---|---|
| KSZ8081RNA | F | F | F | F | NF | NF | NF | NF |
| KSZ8081RND | NF | NF | NF | NF | F | F | F | F |

NF : Not fitted
F : Fitted

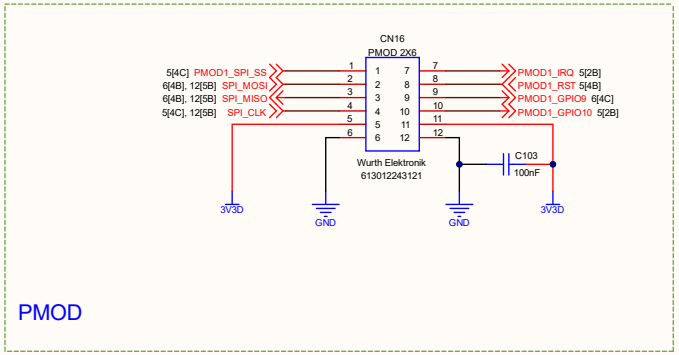


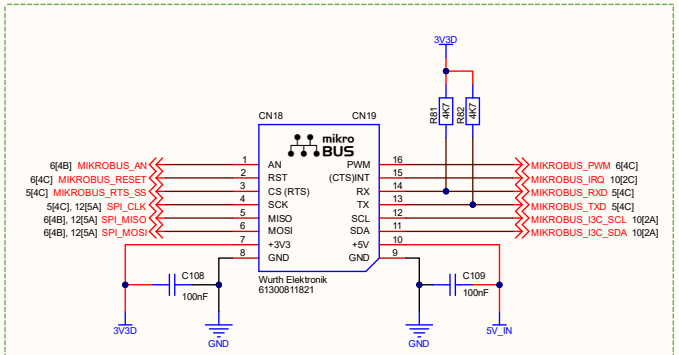


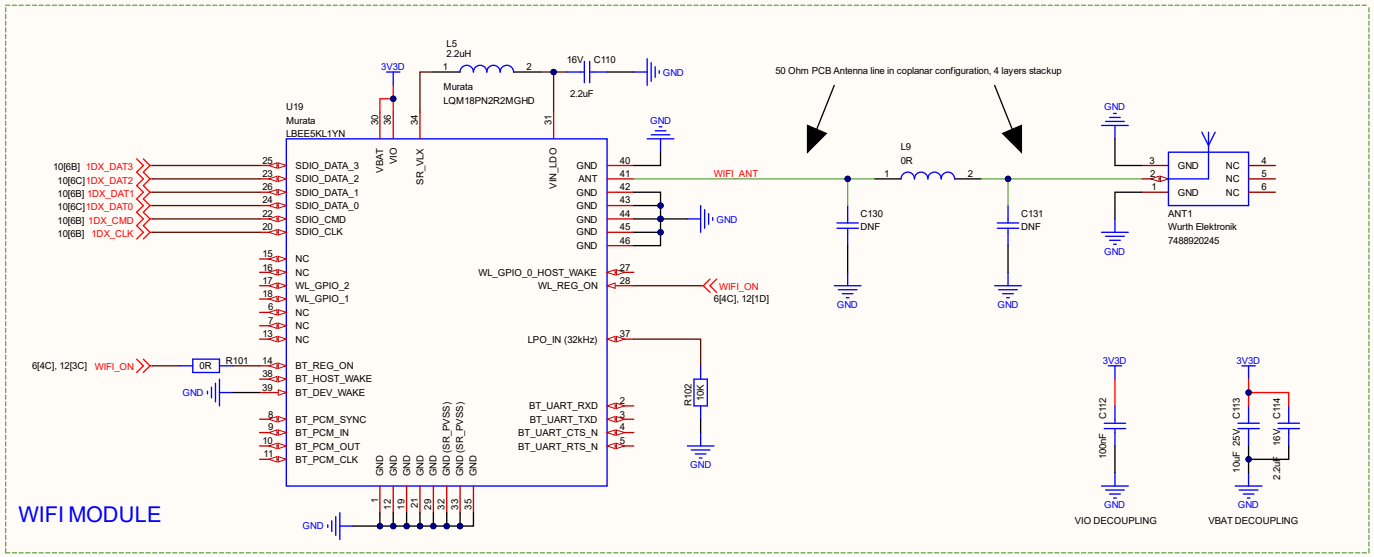


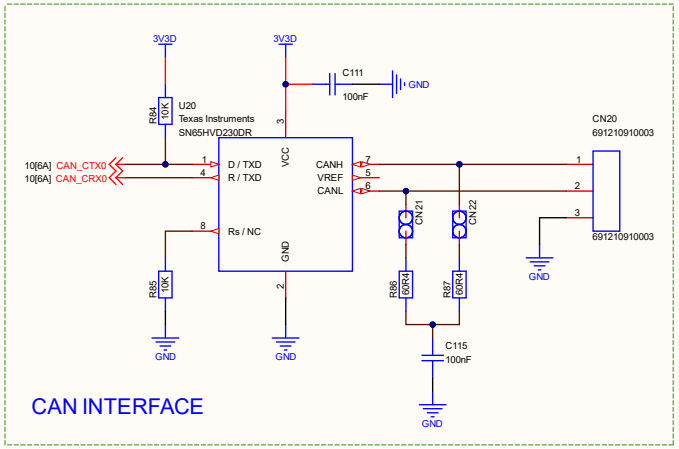


| | | | | | | | |
|---|---|---|---|---|---|---|---|
| | PRODUCT | M13-RA8x1-EK Evaluation Board | | DRAWN BY | Patrick SIONG | DRAWN DATE | 2023.12.05 |
| | PAGE | Communications: Ethernet, PMOD, Mikrobus, CAN, Wifi | | APPROVED BY | | APPD. DATE | |
| m3design | REFERENCE | VERSION | REV | REMARKS | UPDATED ON | SIZE | SHEET |
| | MTD0001.2301 | V1.0 | | | 2024.08.05 | A4 | 12 OF 14 |

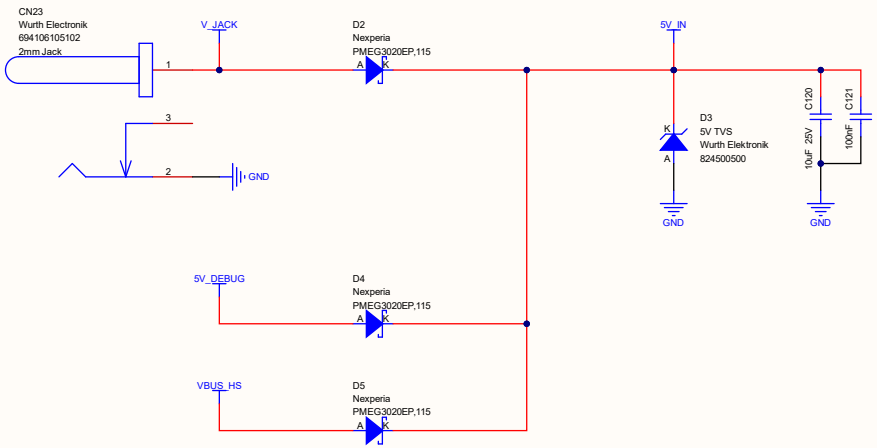


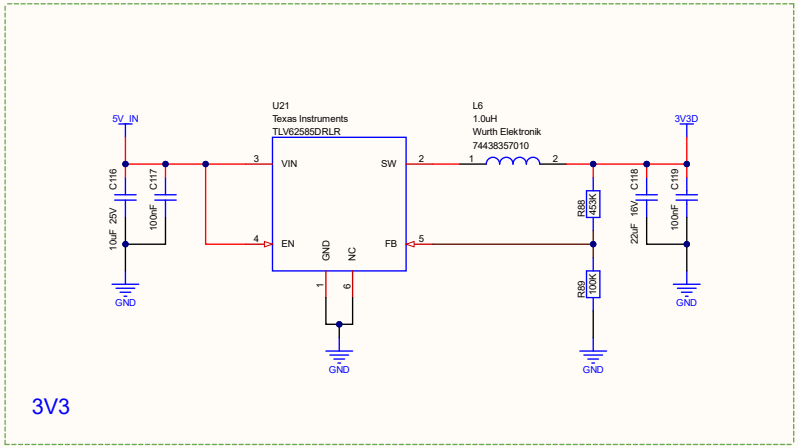


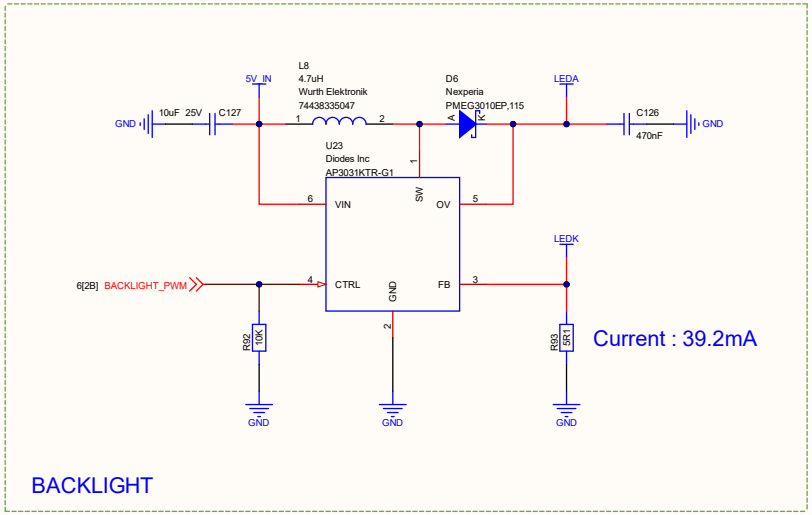


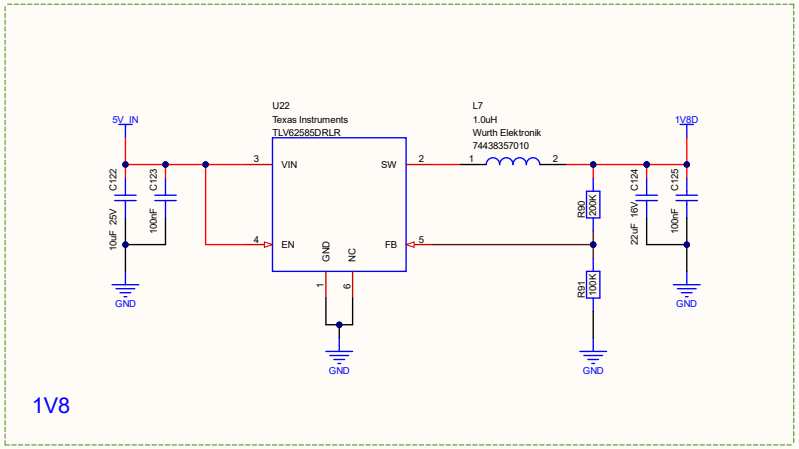


| | | | | | | | |
|---|---|---|---|---|---|---|---|
| | PRODUCT | M13-RA8x1-EK Evaluation Board | | DRAWN BY | Patrick SIONG | DRAWN DATE | 2023.12.05 |
| | PAGE | Board Power Supply | | APPROVED BY | | APPD. DATE | |
| m3design | REFERENCE | VERSION | REV | REMARKS | UPDATED ON | SIZE | SHEET |
| | MTD0001.2301 | V1.0 | | | 2024.08.05 | A4 | 13 OF 14 |

## REVISION HISTORY

| DATE | VERSION | CHANGES |
|---|---|---|
| 2024.08.05 | V1.0 | First draft |
| | | |
| | | |
| | | |
| | | |
| | | |

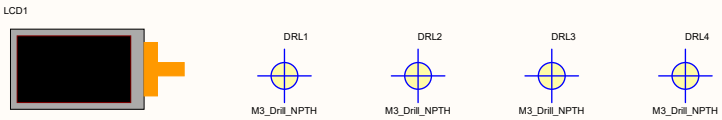


| | | | | | | | |
|---|---|---|---|---|---|---|---|
| | PRODUCT | M13-RA8x1-EK Evaluation Board | | DRAWN BY | Patrick SIONG | DRAWN DATE | 2023.12.05 |
| | PAGE | Mechanical & Revision | | APPROVED BY | | APPD. DATE | |
| m3design | REFERENCE | VERSION | REV | REMARKS | UPDATED ON | SIZE | SHEET |
| | MTD0001.2301 | V1.0 | | | 2024.08.05 | A4 | 14 OF 14 |